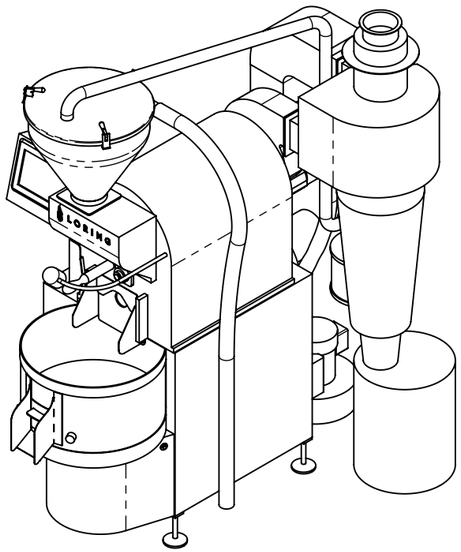

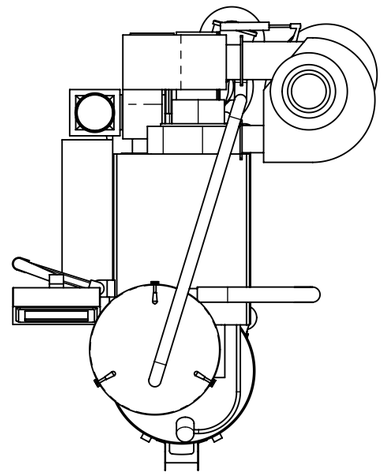

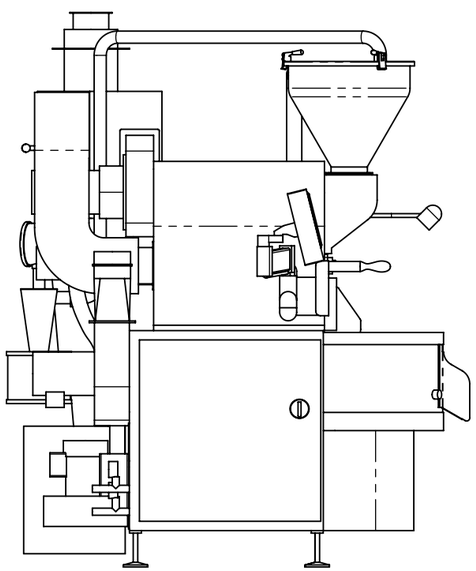

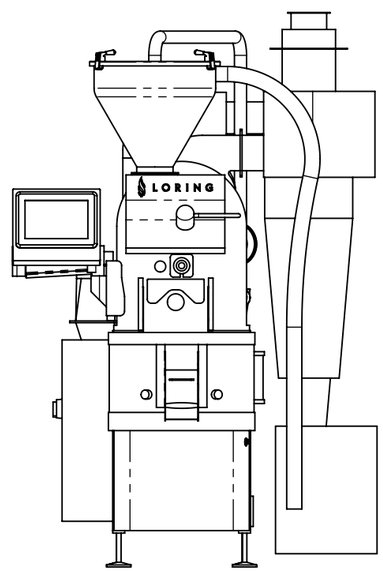

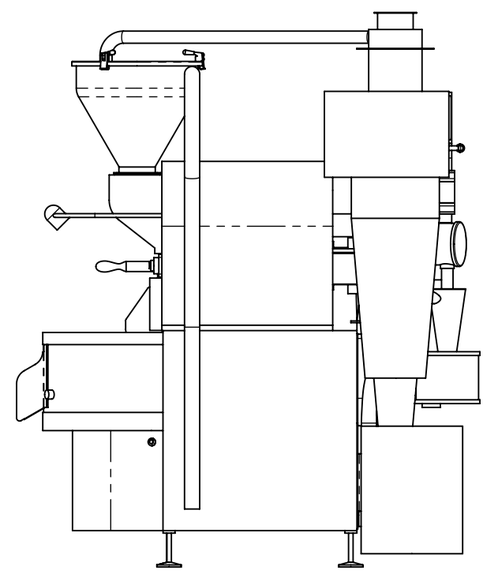

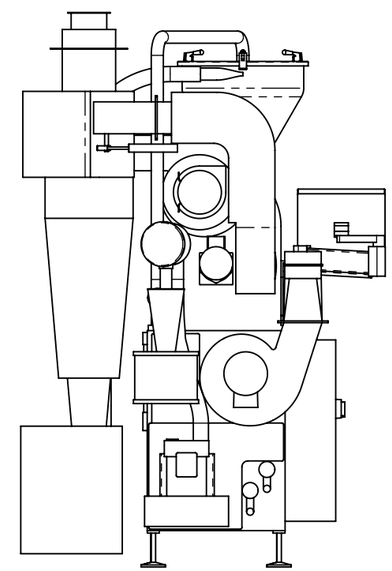

1009544
REF MODEL - S15 ASSY, CUSTOMER, C MOD