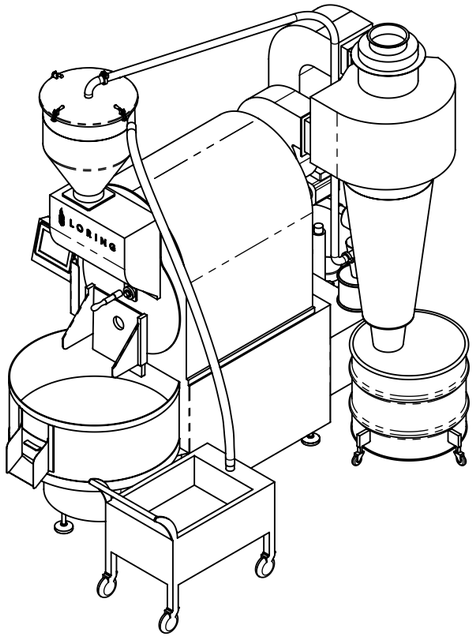

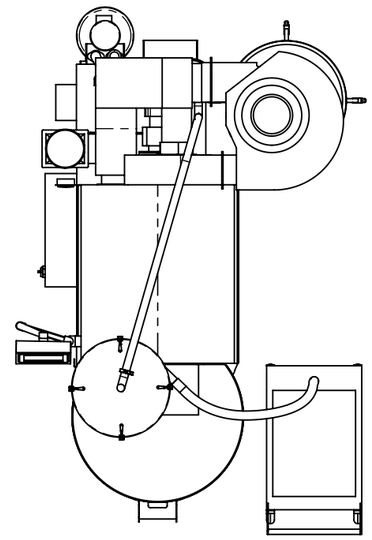

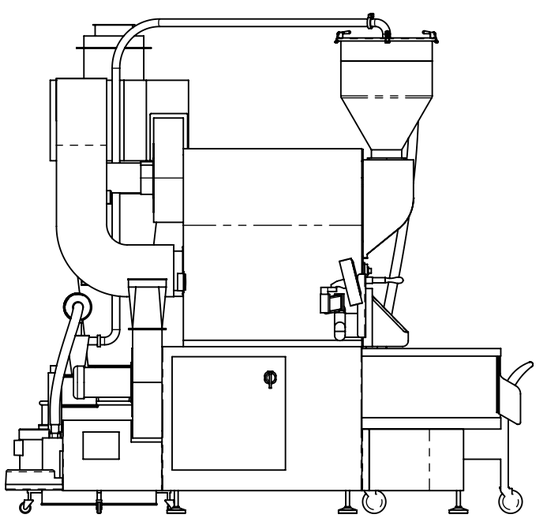

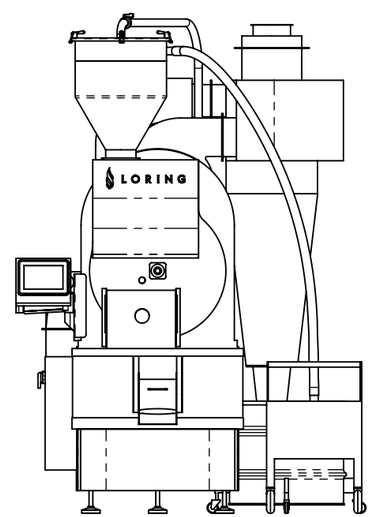

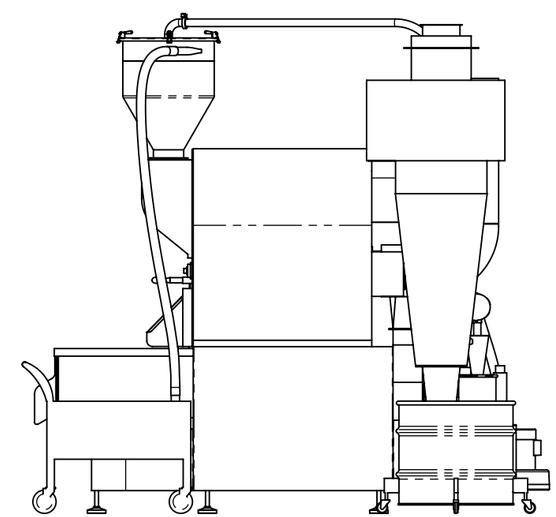

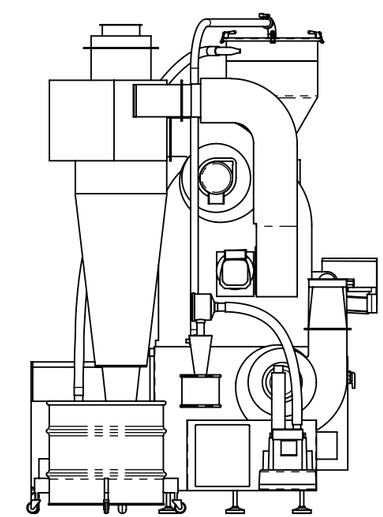

1008802
REF MODEL - S70 ASSY, CUSTOMER, B MOD, AH, AD