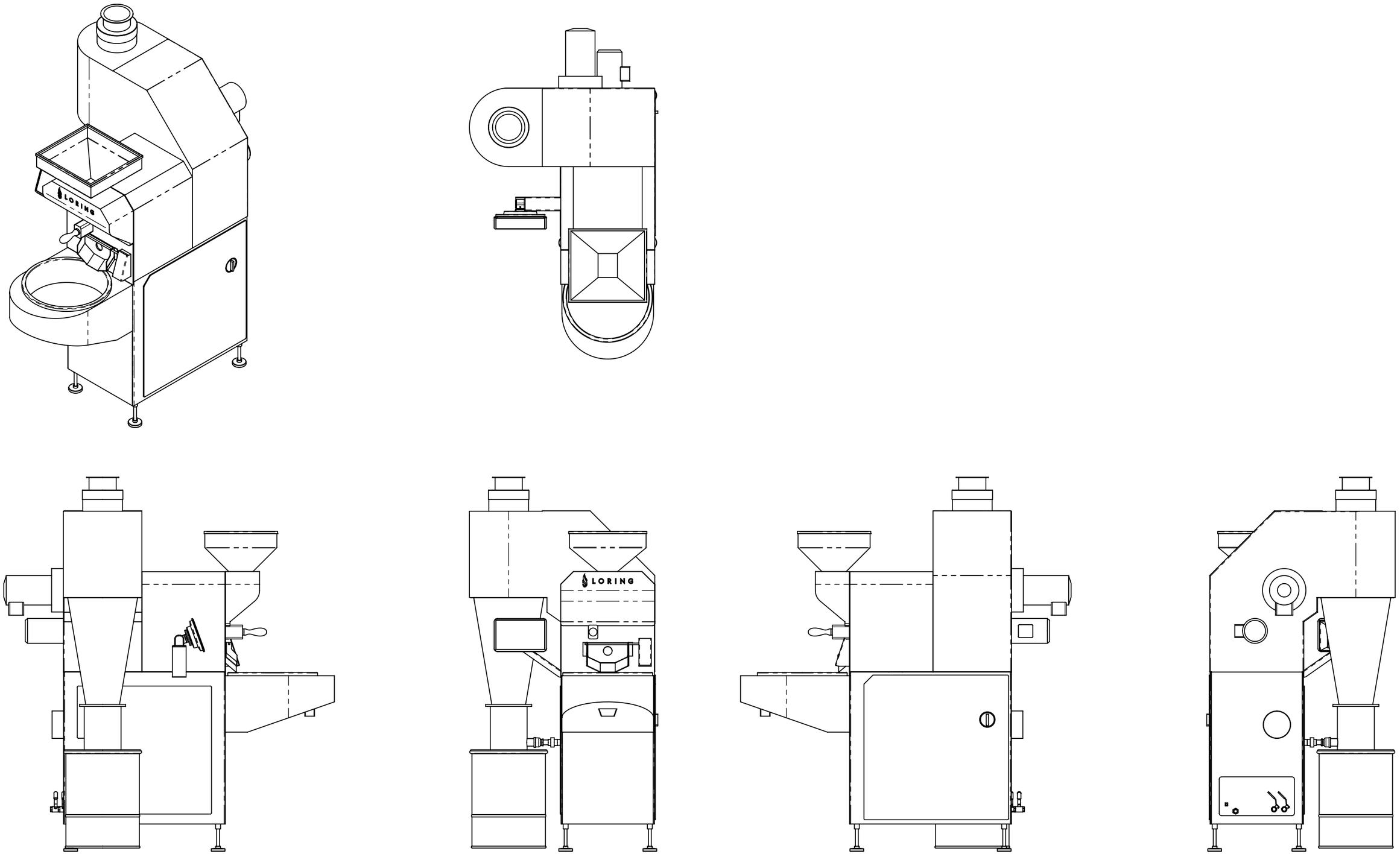

1008782
REF MODEL - S7 ASSY, CUSTOMER