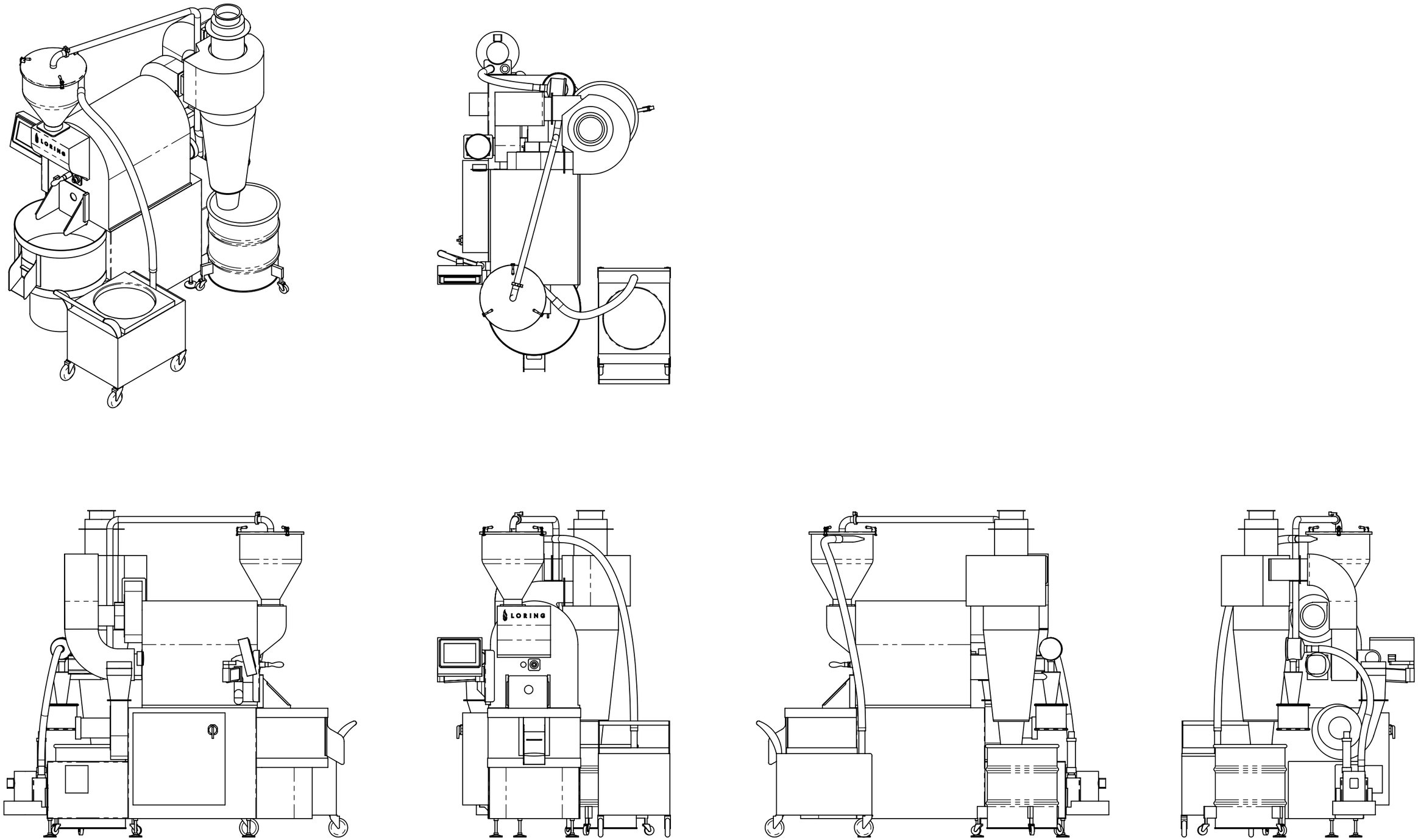

1008801
REF MODEL - S35 ASSY, CUSTOMER, B MOD, AH, AD