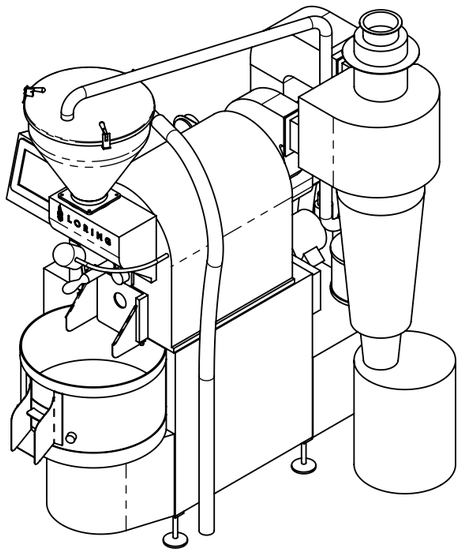

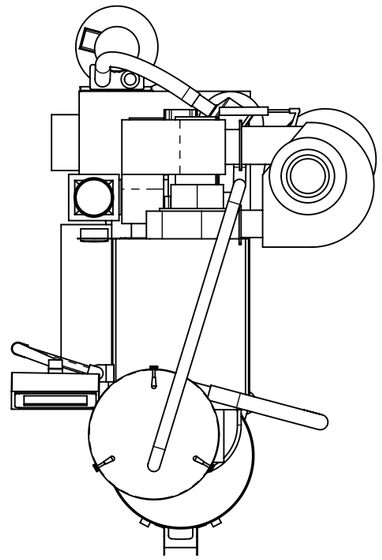

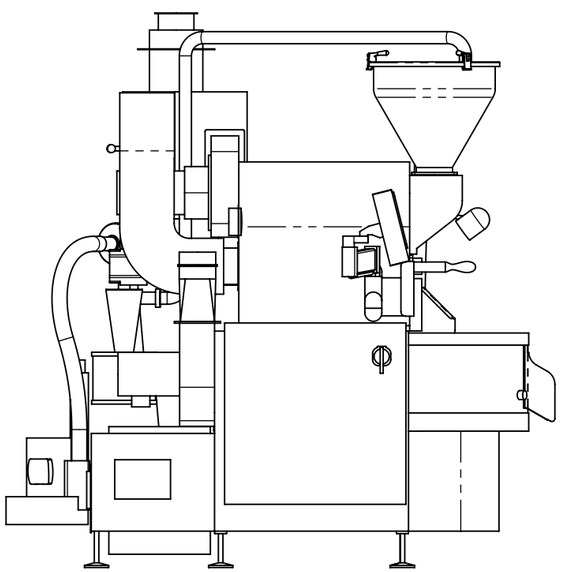

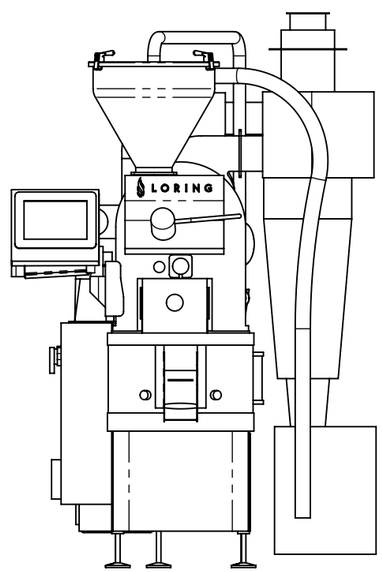

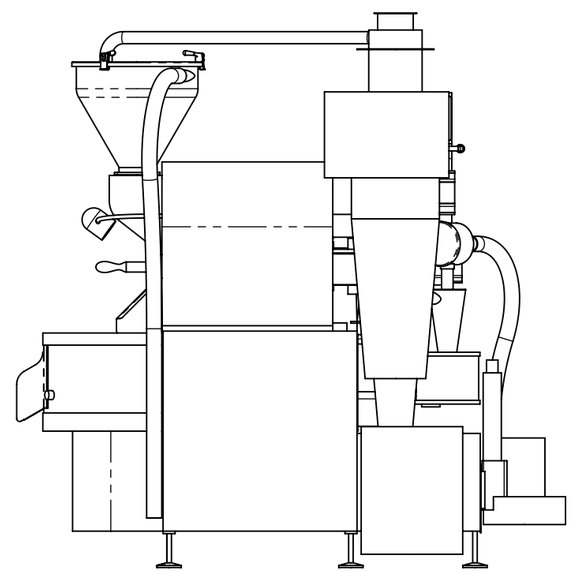

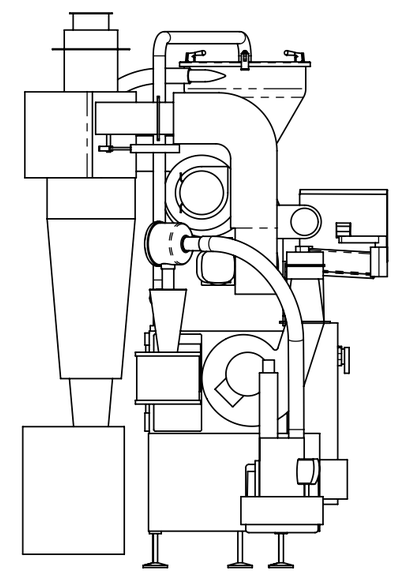

1008800
REF MODEL - S15 ASSY, CUSTOMER, B MOD, AH, AD